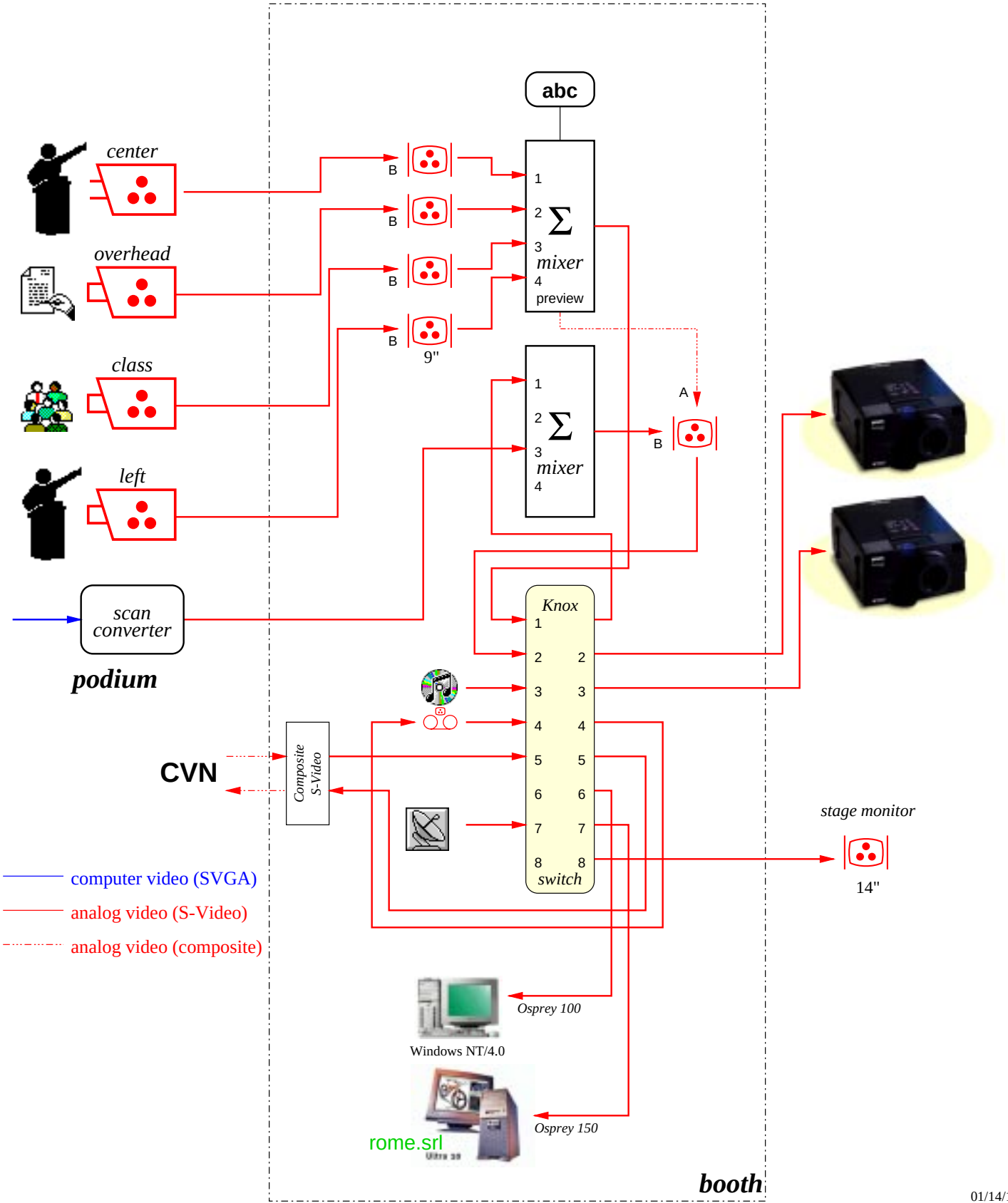
abc
center
overhead
class
left
scan converter
podium
B
9"
1
2
3
mixer
4
preview
A
Knox
switch
CVN
Composite
S-Video
stage monitor
14"
computer video (SVGA)
analog video (S-Video)
analog video (composite)
Osprey 100
Windows NT/4.0
Osprey 150
rome.srl
booth

01/14/1999